IMO

SDI

AC Variable Speed Inverter Drives
0.4kW - 110kW (0.5HP - 150HP)

Feature driven

SD1

Comprehensively specified inverters for AC motors 0.4kW - 110kW (0.5HP - 150HP)

- Single-phase up to 2.2kW (3HP)
- Three-phase up to 110kW (150HP)
- Torque vector control
- STO (Safe Torque OFF) feature
- Integral Moodbus-RTU / RS485
- Multiple filter options

2 YEAR GUARANTEE

CE

c UL us *

TÜV SÜD

* Approval pending.
Please check with IMO for current status

SD1 AC Inverter Drives

The SD1 range is the ultimate variable speed drive for you! Easy to set up, and comprehensively specified for use in virtually any application, the SD1 is IMO's first complete range of variable speed drives which offer STO (SIL2 / SIL3) dependent upon model, along with a huge range of enhanced features, normally found on much more expensive inverter drives.

A range of EMC filter options makes the SD1 suitable for virtually every industrial, commercial or domestic application.

- IP20
- Torque Vector Control
- STO (Safe Torque OFF) - SIL2 / SIL3
- Up to 150% Starting Torque
- Front Mounted RJ45 Socket (≤2.2kW/3HP)
- Din Rail Mountable (≤2.2kW/3HP)
- Fixed Keypad with Potentiometer (≤2.2kW/3HP)
- Detachable Keypad (≥4kW/5.5HP)

- HDI Input (Pulse)
- 1/2 Analogue Inputs
- 1/2 Analogue Outputs
- 2 C/O Output Relays
- Transistor Output
- 4/5 Digital Inputs
- Selectable PNP/NPN I/O

- Integral Modbus-RTU / RS485
- PID Control as Standard
- DC Injection Braking
- Integral Brake Chopper (≤30kW/40HP)
- Motor Auto-tune (Static & Dynamic)
- Internal DC Reactor (≥18.5kW/25HP)

- Internal C3 Filter (≥4kW/5.5HP)
- Optional C3 Filter (≤2.2kW/3HP)
- Optional C1 & C2 Filter
- CE
- RoHS & Reach Compliant
- UL / cUL* / TUV
- 2 Year Warranty

Safety As Standard

The SD1 is the first entry level range of variable speed drives from IMO which include Safe Torque OFF (STO) as standard. STO is a hugely important safety feature which could prevent industrial accidents and even save lives. But what exactly is STO?

The STO feature ensures that no torque-generating energy is put through the equipment. STO is used to bring the drive to a complete standstill, and also prevents any unexpected or unintentional starting of the motor or drive. It therefore enables safe working when for example, the protective door or cover is open or removed.

The advantage of an integrated STO functionality compared with standard safety solutions using electromechanical switchgear, is initially the elimination of multiple components and associated part failure and manitenance, but is also considerably quicker due to a shorter switching time than a conventional solution.

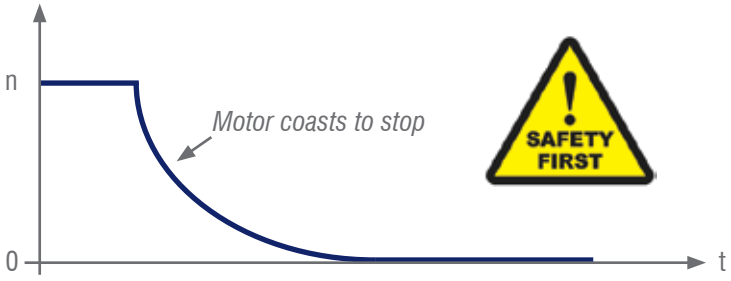

Motor velocity decaying to zero after STO has been activated

STO Benefits:

- Eliminates requirement for conventional solutions such as power cutting relay or contactor
- Reduces time and costs associated with wiring and maintenance

High Performance At Low Speeds

The SD1 range offers torque vector control across all models in the range. IMO is renowned for manufacturing market-leading variable speed drives and the Jaguar range has been long established with high-end features such as torque vector control, however the SD1 range heralds a new era in feature rich inverter drives due to the sheer array of standard features you would normally expect to find in considerably more expensive models.

The SD1 range delivers stable torque output even at low speeds, allowing the SD1 to be used in an even wider range of applications including lifts and conveyor systems, and high-inertia loads that demand a higher starting torque.

Enhanced Control Functionality

As you would expect, a drive from IMO isn't your average run-of-the-mill product. We produce solutions which tick every box, every time, and the SD1 is no different. From offering motor auto-tune which minimises power losses, to PID control which allows motor operation whilst controlling temperature, pressure and flow rate without the use of an external device or controller, together with the inclusion of programmable logic functionality, the SD1 is so packed with features that you wouldn't believe they fit inside its compact and user-friendly form.

Connected For Communications

Every model in the SD1 range offers communcation capability. The connection is completed by way of twisted-pair to the dedicated RS-485 terminals found on the control terminal block - see diagram overlead. Communications are carried out using the Modbus-RTU protocol.

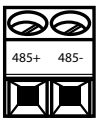

Modbus

SD1 Features

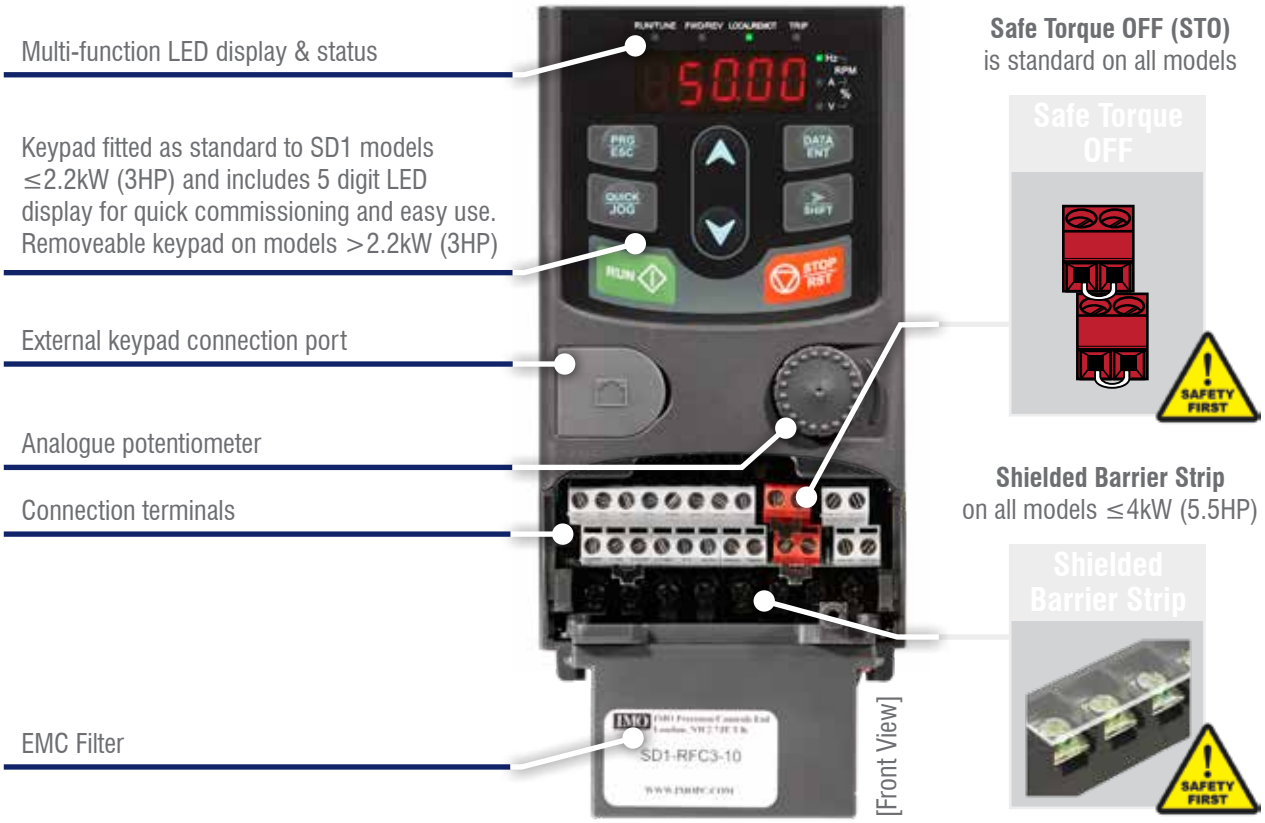

SD1 Application Examples

With the array of advanced features and filter options, the SD1 is suited for use in virtually any application, whether it be industrial, commercial or domestic. The following are examples of, but not limited to, the type of application where the SD1 can be employed:-

Fan Applications

- HVAC
- Water Treatment Plants
- Automatic Milking System

Pump Applications

- HVAC
- Waste Water
- Process Cooling

[Bottom View]

Fan hatch

NOTE:
0.4kW - 2.2kW (0.5HP - 3HP)
External Filter

4kW - 110kW (5.5HP - 150HP)
Internal Filter

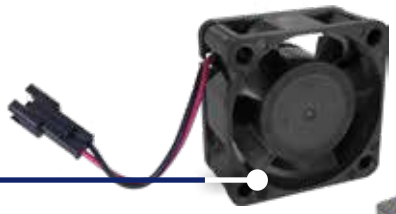

Replaceable fan

EMC Filter (optional)

SD1 Terminal Layout

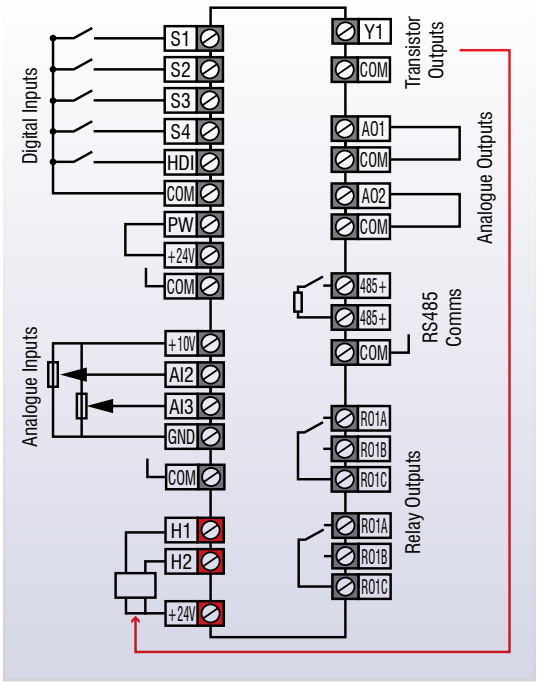

Note: For a more detailed control connections diagram, please refer to the SD1 technical datasheet found at www.imopc.com

Conveyor Applications

- Mining & Metals
- Logistics
- Food Machinery

Hoist Applications

- Cranes & Lifts
- RTG's
- Material Handling

The versatile and feature-rich SD1 is ideal for hundreds of different applications in all segments of industry

www.imopc.com sales@imopc.com ☎ 01707 414 444

SD1 Ratings & Specifications

Single Phase 220Vac					
Model	Frame Size	Output Power		Input Current	Output Current
SD1-2.5A-21	1	0.4kW	0.5HP	6.5A	2.5A
SD1-4.2A-21	1	0.75kW	1.0HP	9.3A	4.2A
SD1-7.5A-21	2	1.5kW	2.0HP	15.7A	7.5A
SD1-10A-21	2	2.2kW	3.0HP	24.0A	10.0A

Three Phase 220Vac					
Model	Frame Size	Output Power		Input Current	Output Current
SD1-2.5A-23	2	0.4kW	0.5HP	3.7A	2.5A
SD1-4.2A-23	2	0.75kW	1.0HP	5.0A	4.2A
SD1-7.5A-23	3	1.5kW	2.0HP	7.7A	7.5A
SD1-10A-23	3	2.2kW	3.0HP	11.0A	10.0A
SD1-16A-23	3	4.0kW	4.5HP	17.0A	16.0A
SD1-20A-23	4	5.5kW	7.5HP	21.0A	20.0A
SD1-30A-23	4	7.5kW	10.0HP	31.0A	30.0A

Three Phase 380Vac					
Model	Frame Size	Output Power		Input Current	Output Current
SD1-2.5A-43	2	0.75kW	1.0HP	3.4A	2.5A
SD1-4.2A-43	2	1.5kW	2.0HP	5.0A	4.2A
SD1-5.5A-43	2	2.2kW	3.0HP	5.8A	5.5A
SD1-9.5A-43	3	4.0kW	5.5HP	13.5A	9.5A
SD1-14A-43	3	5.5kW	7.5HP	19.5A	14.0A
SD1-18.5A-43	4	7.5kW	10.0HP	25.0A	18.5A
SD1-25A-43	4	11.0kW	15.0HP	32.0A	25.0A
SD1-32A-43	4	15.0kW	20.0HP	40.0A	32.0A
SD1-38A-43	5	18.5kW	25.0HP	47.0A	38.0A
SD1-45A-43	5	22.0kW	30.0HP	51.0A	45.0A
SD1-60A-43	6	30.0kW	40.0HP	70.0A	60.0A
SD1-75A-43	6	37.0kW	50.0HP	80.0A	75.0A
SD1-92A-43	7	45.0kW	60.0HP	98.0A	92.0A
SD1-115A-43	7	55.0kW	75.0HP	128.0A	115.0A
SD1-150A-43	7	75.0kW	100.0HP	139.0A	150.0A
SD1-180A-43	8	90.0kW	125.0HP	168.0A	180.0A
SD1-215A-43	8	110.0kW	150.0HP	201.0A	215.0A

Dimensions

Frame Size 1		
Height	Width	Depth
160mm (6¼")	80mm (3⅛")	123.5mm (4⅞")

Frame Size 2		
Height	Width	Depth
185mm (7¼")	80mm (3⅛")	140.5mm (5½")

Frame Size 3		
Height	Width	Depth
256mm (10¼")	146mm (5¾")	167mm (6⅝")

Frame Size 4		
Height	Width	Depth
320mm (12⅝")	170mm (6¾")	196.3mm (7¾")

Frame Size 5		
Height	Width	Depth
340.6mm (13⅜")	200mm (7⅞")	184.3mm (7¼")

Frame Size 6		
Height	Width	Depth
400mm (15¾")	250mm (9⅞")	202mm (8")

Frame Size 7		
Height	Width	Depth
560mm (22")	282mm (11⅛")	238mm (9⅜")

Frame Size 8		
Height	Width	Depth
554mm (21⅞")	338mm (13¼")	329.2mm (13")

Note: Imperial measurements tollerance ±¼"

Options & Ordering Codes

SD1 - **2.5A** - **21**

- SD1 — Series Code
- 2.5A — Nominal Power (see Output Current)
- 21 — Input & Phase

21	220V Single Phase
23	220V Three Phase
43	380V Three Phase

Optional External EMC Filters

Single Phase 220Vac				
Model	C3 Filter / Current		C2 Filter / Current	
SD1-2.5A-21	SD1-RFC3-10	10A	SD1-RFC2-10	10A
SD1-4.2A-21	SD1-RFC3-10	10A	SD1-RFC2-10	10A
SD1-7.5A-21	SD1-RFC3-10	10A	SD1-RFC2-16	16A
SD1-10A-21	SD1-RFC3-10	10A	SD1-RFC2-16	16A

Three Phase 220Vac				
Model	C3 Filter / Current		C2 Filter / Current	
SD1-2.5A-21	SD1-RFC3-7	7A	SD1-RFC2-6	6A
SD1-4.2A-21	SD1-RFC3-7	7A	SD1-RFC2-6	6A
SD1-7.5A-21	Internal	-	SD1-RFC2-16	16A
SD1-10A-21	Internal	-	SD1-RFC2-16	16A
SD1-16A-23	Internal	-	SD1-RFC2-32	32A
SD1-20A-23	Internal	-	SD1-RFC2-32	32A
SD1-30A-23	Internal	-	SD1-RFC2-45	45A

Three Phase 380Vac				
Model	C3 Filter / Current		C2 Filter / Current	
SD1-2.5A-43	SD1-RFC3-7	7A	SD1-RFC2-6	6A
SD1-4.2A-43	SD1-RFC3-7	7A	SD1-RFC2-6	6A
SD1-5.5A-43	SD1-RFC3-7	7A	SD1-RFC2-6	6A
SD1-9.5A-43	Internal	-	SD1-RFC2-16	16A
SD1-14A-43	Internal	-	SD1-RFC2-16	16A
SD1-18.5A-43	Internal	-	SD1-RFC2-32	32A
SD1-25A-43	Internal	-	SD1-RFC2-32	32A
SD1-32A-43	Internal	-	SD1-RFC2-45	45A
SD1-38A-43	Internal	-	SD1-RFC2-45	45A
SD1-45A-43	Internal	-	SD1-RFC2-65	65A
SD1-60A-43	Internal	-	SD1-RFC2-65	65A
SD1-75A-43	Internal	-	SD1-RFC2-100	100A
SD1-92A-43	Internal	-	SD1-RFC2-100	100A
SD1-115A-43	Internal	-	SD1-RFC2-150	150A
SD1-150A-43	Internal	-	SD1-RFC2-150	150A
SD1-180A-43	Internal	-	SD1-RFC2-240	240A
SD1-215A-43	Internal	-	SD1-RFC2-240	240A

Accessories

Model	Description
SD1-KP	Remote Keypad
SD1-KP-CPY	Remote Keypad with Copy function
SD1-KP-MB	Keypad Mounting Bracket

SD1-KP

SD1-KP-MB

IMO Worldwide Offices

IMO Precision Controls Limited
The Interchange
Frobisher Way
Hatfield, Herts AL10 9TG
United Kingdom

Tel: 01707 414 444
Fax: 01707 414 445
Email: imo@imopc.com
Web: www.imopc.com

IMO Jeambrun Automation SAS
5, Rue Alfred De Musset
94100
Saint-Maur-Des-Fosses
France

Tel: 0800 912 712 (nº gratuit)
Fax: 0145 134 737
Email: imo-fr@imopc.com
Web: www.imojeambrun.fr

IMO Automazione
Via Belfiore 10,
50144 Firenze (FI)
Italia

Tel: 800 930 872 (toll free)
Fax: 8000 452 6445
Email: imo-it@imopc.com
Web: www.imopc.it

IMO Canada
Unit 32 - B - North
18 Strathearn Avenue, Brampton
Ontario L6T 4Y2
Canada

Tel: 905 799 9237
Fax: 905 799 0450
Email: imo-ca@imopc.com
Web: www.imopc.com

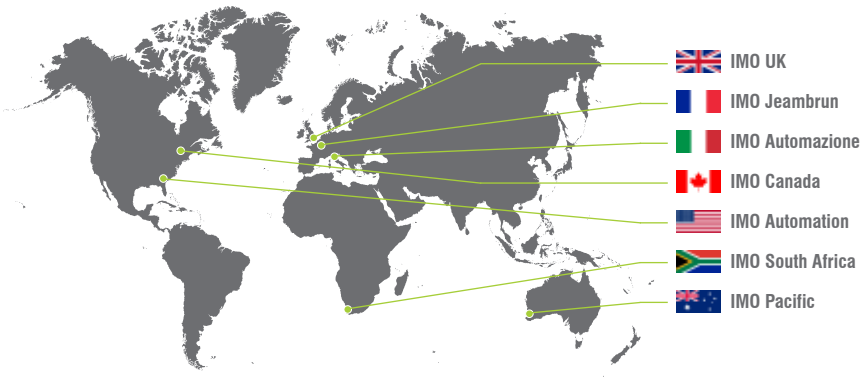

IMO Automation LLC
Steeplechase Industrial Park
Suite E, 5845 Steeplechase Blvd
Cumming, GA 30040
USA

Tel: 404 476 8810
Fax: 678 679 7112
Email: imo-usa@imopc.com
Web: www.imoautomation.com

IMO South Africa (Pty) Ltd
G16 Centurion Business Park
Montague Gardens
Cape Town 7441
South Africa

Tel: 021 551 1787
Fax: 021 555 0676
Email: info@imopc.co.za
Web: www.imopc.co.za

IMO Pacific Pty Ltd
Unit 9, Dillington Pass
Landsdale
Perth WA 6065
Australia

Tel: 1300 34 21 31
Fax: 08 9303 9908
Email: sales@imopacific.com.au
Web: www.imopacific.com.au

Connect with and follow IMO Precision Controls Ltd.
for the latest news, views and reviews

ISO 9001 Registered Quality Management

UKAS MANAGEMENT SYSTEMS 015

CAT-SD1-UK/0118v6

Errors and omissions excepted. Subject to change without notice. Information correct at time of print.